If you're installing this scale with a **new SendPro C device**:

STOP

1. Make sure you've unpacked the Open Me First box and followed the enclosed instructions.
2. During SendPro C setup, select "Skip" at the "Install Scale" screen, and follow these instuctions.

The "Open Me First" box may arrive in separate shipment from this Shipping Label Printer box.

Otherwise:

Follow these instructions to install this scale to your SendPro C device.

AW32479 Rev.A 09/17

MP82 Scale Installation Instructions

⚠ Check the carton for damage before unpacking. Notify the carrier of any shipping damage. Remove the components from the package.

What's in the box

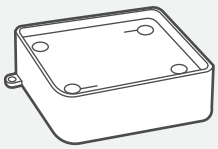

Scale Base

Scale Platter

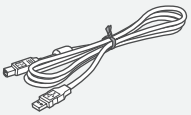

USB Cable

Wire seal with locking cap

Your display kit will include one of the following kits.

A: Scale mount display kit

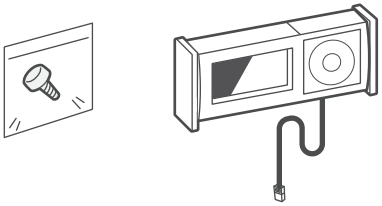

B: Remote display kit

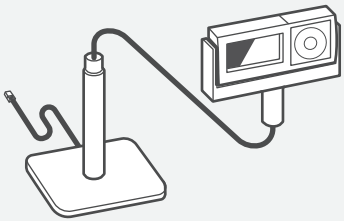

1. Prepare the scale for installation.

Remove the scale platter and protective foam from the scale.

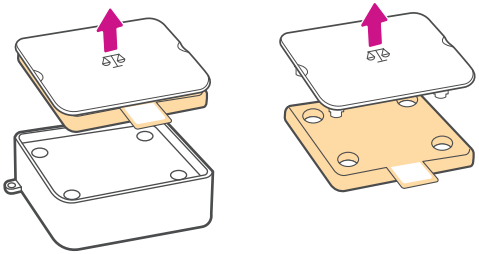

Turn the scale base over as shown in the image below.

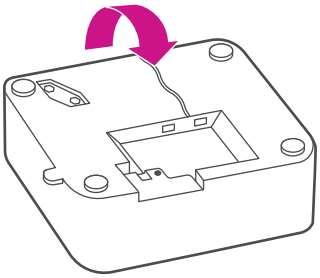

2. Attach display to the scale.

If you have scale mount display kit.

2a. Mount the display kit to the scale, and fasten with screw.

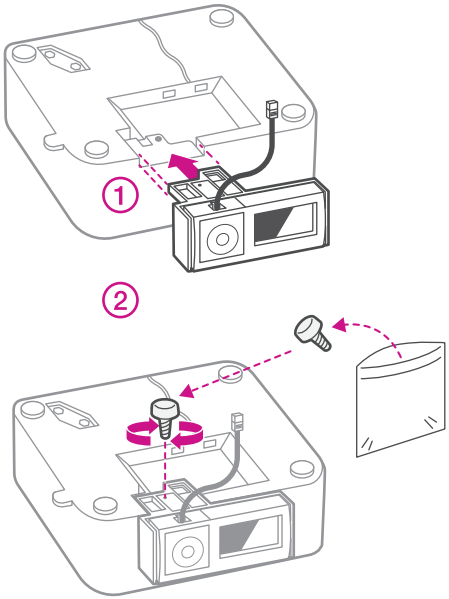

If you have remote display kit.

2a. Mount the display on the stand post.

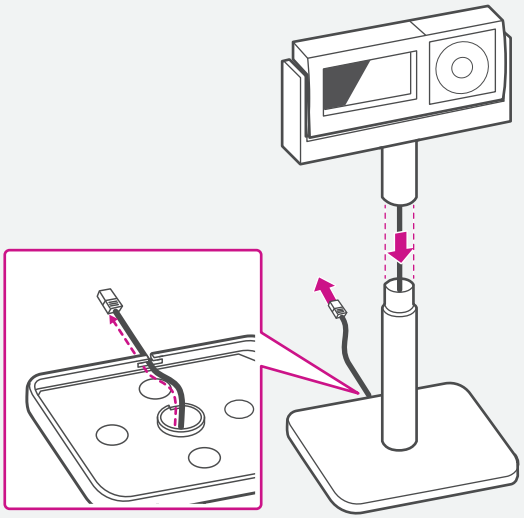

2b. Connect the other side of cable to the display port marked "".

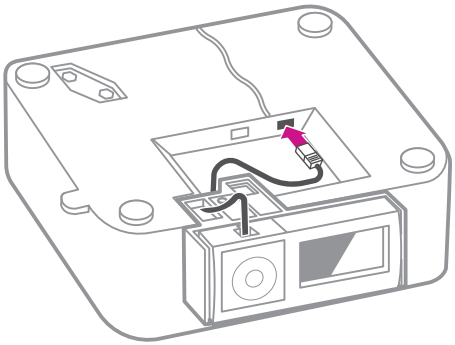

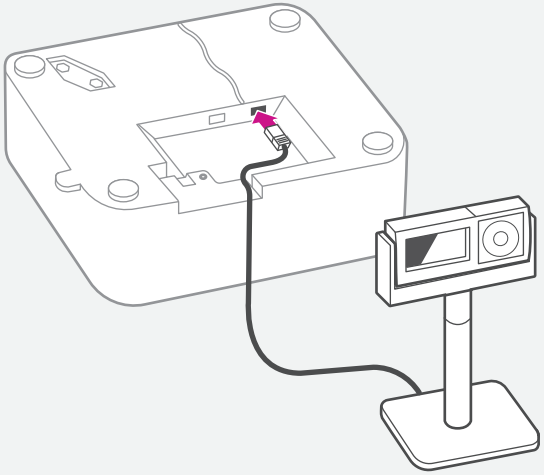

2c. Plug the small end of the USB cable into the scale connector port marked “ ”.
The scale will power up when large end is plugged into the device.

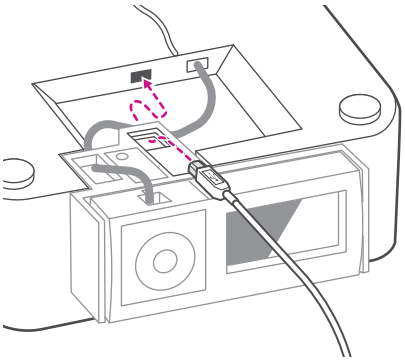

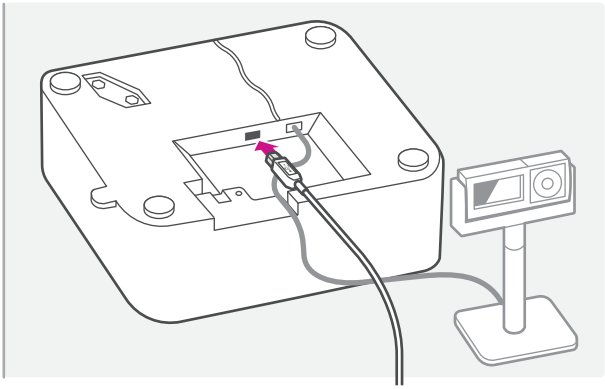

2d. Place scale in position where it will be used.

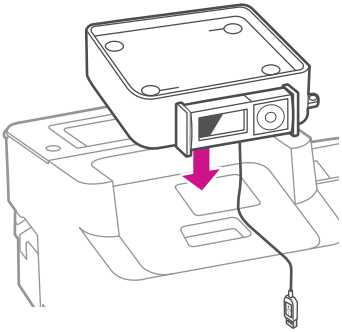

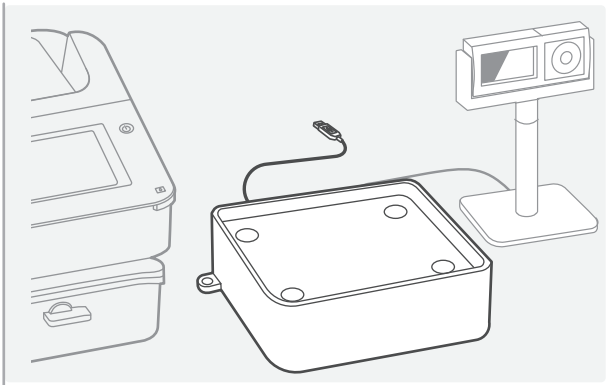

If the scale is positioned off to the side with scale mount display, route the USB cable into the channel at the bottom of scale.

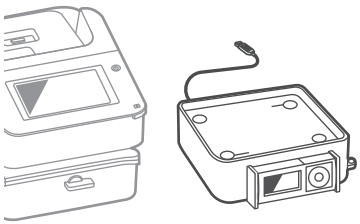

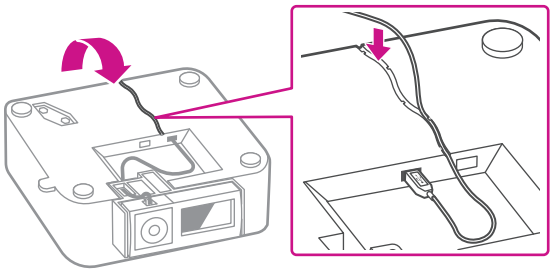

3. Level the scale.

The scale is equipped with a level bubble on the side as shown and make sure the bubble is within the circle in the level bubble.

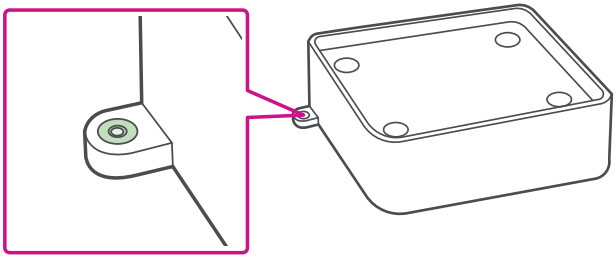

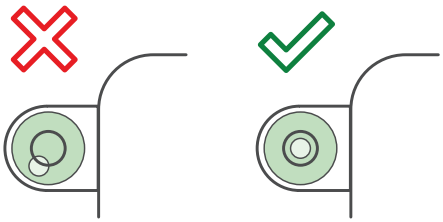

Press on alternate sides of the scale and make sure scale does not rock.

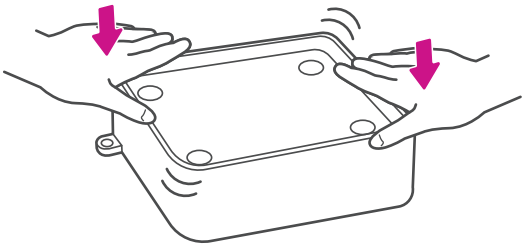

If needed, level the scale by turning adjustable feet at bottom of the unit.

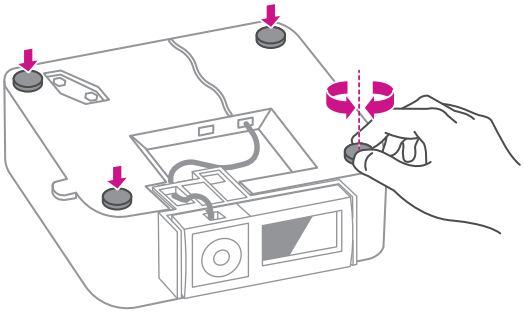

4. Place the platter on the scale.

4a. Press down on the platter.

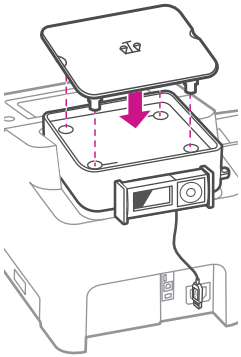

OR

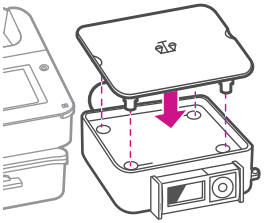

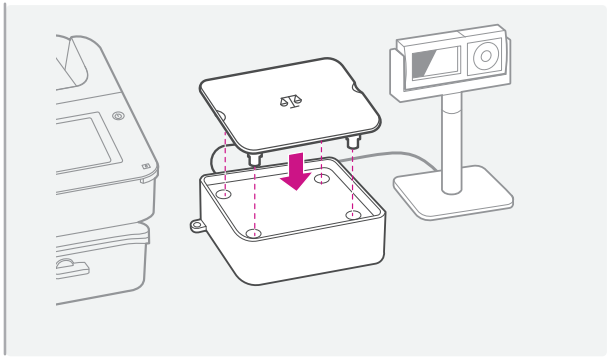

4b. Make sure platter is fully seated.

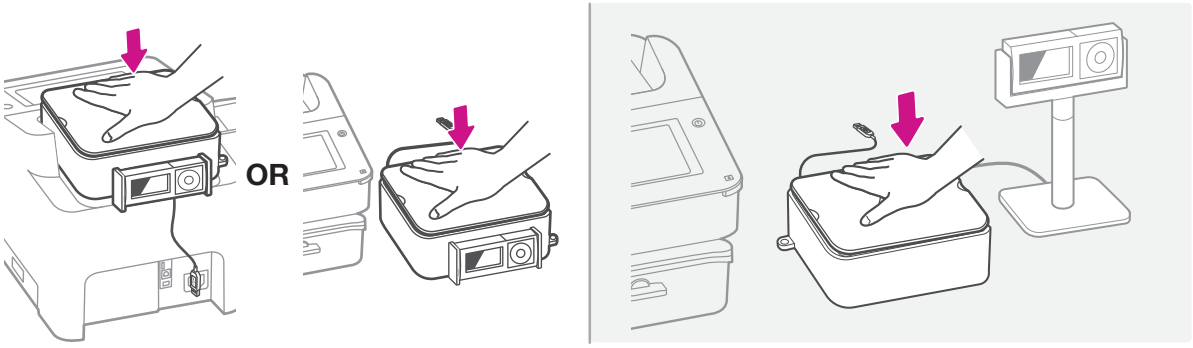

5. Set the Location Code to SendPro C Device.

5a. Go to SendPro C device's screen and tap setting icon.

5b. Tap Location & Time Zone under Device & Network section.

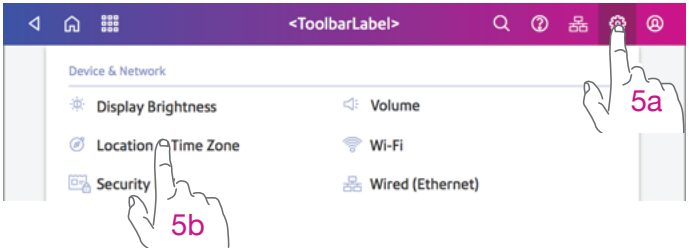

5c. Go to Location Code dropdown and select a proper location code from the list.
Refer to the following GEO Codes tables for the location code.

5d. Reselect the Time Zone from dropdown .

5e. Tap Apply button.
(Apply stays greyed out.)

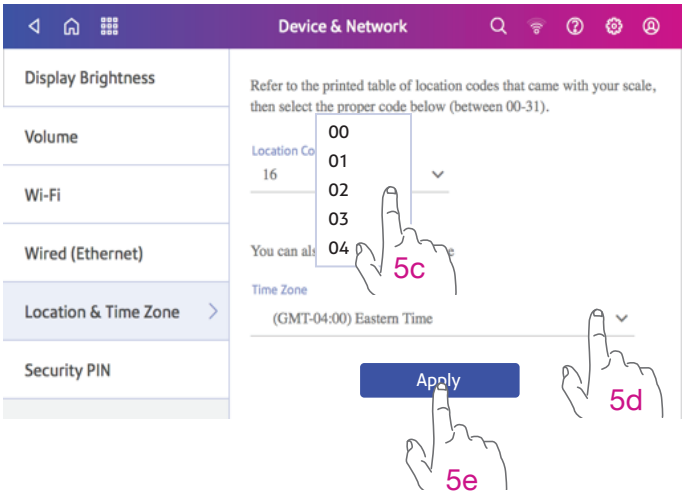

6. Connect the USB Cable.

The scale is powered through the USB cable. No external power supply is needed. The connector port marked "⭠" is located on the backside of the device, as shown.
Plug the large end of USB cable into your device.

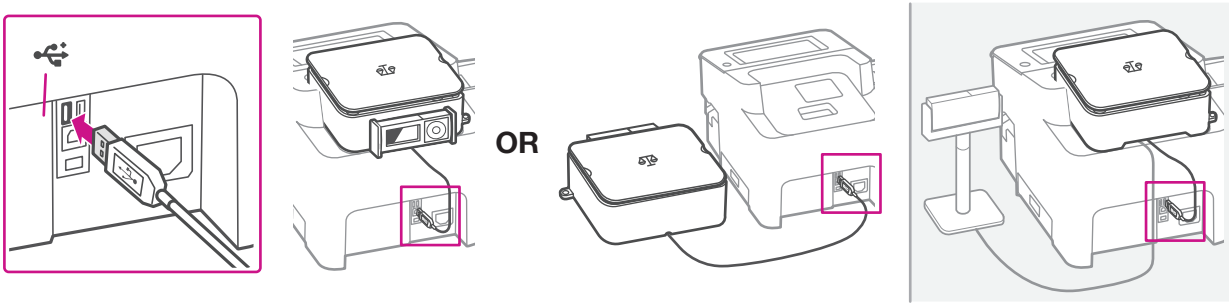

7. Calibrate the Scale

7a. Scale will reboot and an **Initial Setup** screen will be displayed on the remote scale display and you are prompted for a **GEO Code**.
7b. Press the right or left arrow keys to select the correct Location Code. (The location code must be same as one selected on the SendPro C device.)
7c. Once the correct Location Code is displayed press the down arrow. (the selector box will move to the Exit.)
7d. Press the center select arrow to select **Exit**.

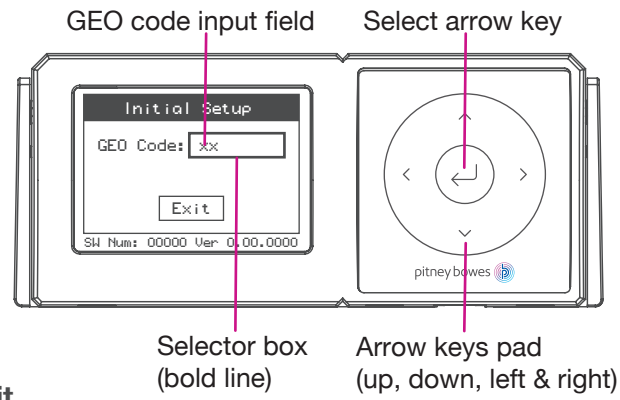

The display and scale will reboot, and display "**0 lb 0.0 oz**".
Test weighing and make sure both the scale display and SendPro mail app show same weighing amount.
The scale is now ready for use.

⚠ Safety Precautions

CAUTION: This equipment is intended to be used with limited power circuits with SELV and non-hazardous energy outputs. Pitney Bowes equipment complies with this requirement.
- Do not disassemble the scale.
- Do not place lighted candles, cigarettes, cigars, etc., on the scale.
- Use the equipment only for its intended purpose.

Geo Codes

The “Geo Code” request occurs only during the initial setup. For states / providences that have multiple listings, choose the location that is closest to you. The Geo code within an area is based on latitude and is segmented between north and south directions only. Locations near a boundary can chose either code.

Geo Location Codes for United States

State	Code	State	Code	State	Code
Alabama		**Indiana**		**North Carolina**	
Birmingham & North	13	North of Indianapolis	16	Raleigh & North	14
South of Birmingham	12	Indianapolis & South	15	South of Raleigh	13
Alaska		**Iowa**		**North Dakota**	18
Anchorage & South	23	North of Des Moines	17	**Ohio**	
Anchorage – Kotzebue	26	Des Moines & South	16	Akron & North	16
North of Kotzebue	27	**Kansas**	14	South of Akron	15
Arizona		**Kentucky**	14	**Oklahoma**	13
Phoenix & North	12	**Louisiana**	12	**Oregon**	
South of Phoenix	11	**Maine**	18	Salem & North	18
Arkansas	13	**Maryland**	15	Salem - Oakridge	17
California		**Massachusetts**	17	South of Oakridge	16
North of Chico	16	**Michigan**		**Pennsylvania**	16
Chico – San Francisco	15	NW of Lake Michigan	18	**Rhode Island**	16
San Fran. - Bakersfield	14	SE of Lake Michigan	17	**South Carolina**	13
South of Bakersfield	13	**Minnesota**	18	**South Dakota**	17
Colorado		**Mississippi**		**Tennessee**	13
Denver & North	13	Kosciusko & North	13		
South of Denver	12	South of Kosciusko	12		

Geo Location Codes for United States

State	Code
Connecticut	16
Delaware	15
Florida	
West Palm Beach & North	11
South of West Palm Beach	10
Georgia	12
Hawaii	9
Idaho	
North of Salmon River Mt.	17
South of Salmon River Mt.	16
Illinois	
Bloomington & North	16
South of Bloomington	15
Missouri	
North of Springfield	15
Springfield & South	14
Montana	
Helena & North	18
South of Helena	17
Nebraska	15
Nevada	13
New Hampshire	17
New Jersey	16
New Mexico	11
New York	
Albany & North	17
South of Albany	16
Texas	
NE of Colorado River	12
SW of Colorado River	11
Utah	13
Vermont	17
Virginia	14
Washington, DC	15
Washington State	18
West Virginia	15
Wisconsin	
Green Bay & North	18
South of Green Bay	17
Wyoming	
North of Casper	15
Casper & South	14

Geo Location Codes for Canada					
Providence	Code	Providence	Code	Providence	Code
Alberta		**Newfoundland**		**Prince Edward Island**	
Calgary	19	Com by Chancee	19	Charlottetown	19
Edmonton	21	St. John's	19	**Quebec**	
British Columbia		**Nova Scotia**		Charlesbourg	19
Vancouver	20	Halifax	18	Montreal	18
Victoria	19	**Ontario**		Trois Rivieres	19
Prince Rupert	22	Ottawa	18	Ville de Quebec	19
Manitoba		Sudbury	18	**Saskatchewan**	
Moose Jaw	20	Thunder Bay	20	Regina	20
Winnipeg	20	Toronto	17	Saskatoon	21
New Brunswick		Windsor	16		
Moncton	19				
Saint - John	18				

GEO Codes by Latitude and Altitude

The table below designates the specific geocode for the ‘point of use’ city, based on its latitude and altitude. An internet search can be done to determine the city’s latitude and altitude. For example, the web site below is one of several that calculates the latitude and altitude of a city:

www.mapcoordinates.net

Latitude North or South, in Degrees and Minutes	Height Above Sea Level, in Meters										
	0	325	650	975	1300	1625	1950	2275	2600	2925	3250
	325	650	975	1300	1625	1950	2275	2600	2925	3250	3575
	Height Above Sea Level, in Feet										
	0	1060	2130	3200	4260	5330	6400	7460	8530	9600	10660
	1060	2130	3200	4260	5330	6400	7460	8530	9600	10660	11730
0° 0'– 5° 46'	5	4	4	3	3	2	2	1	1	0	0
5° 46'– 9° 52'	5	5	4	4	3	3	2	2	1	1	0
9° 52'–12° 44'	6	5	5	4	4	3	3	2	2	1	1
12°44'–15° 6'	6	6	5	5	4	4	3	3	2	2	1
15° 6'– 17° 0'	7	6	6	5	5	4	4	3	3	2	2
17°10'–19° 2'	7	7	6	6	5	5	4	4	3	3	2
19° 2'– 20° 45'	8	7	7	6	6	5	5	4	4	3	3
20°45'–22° 22'	8	8	7	7	6	6	5	5	4	4	3
22°22'–23° 54'	9	8	8	7	7	6	6	5	5	4	4
23°54'–25° 21'	9	9	8	8	7	7	6	6	5	5	4
25°21'–26° 45'	10	9	9	8	8	7	7	6	6	5	5
26°45'–28° 6'	10	10	9	9	8	8	7	7	6	6	5
28° 6'– 29° 25'	11	10	10	9	9	8	8	7	7	6	6
29°25'–30° 41'	11	11	10	10	9	9	8	8	7	7	6

Latitude North or South, in Degrees and Minutes	Height Above Sea Level, in Meters										
	0	325	650	975	1300	1625	1950	2275	2600	2925	3250
	325	650	975	1300	1625	1950	2275	2600	2925	3250	3575
	Height Above Sea Level, in Feet										
	0	1060	2130	3200	4260	5330	6400	7460	8530	9600	10660
	1060	2130	3200	4260	5330	6400	7460	8530	9600	10660	11730
30°41'–31° 56'	12	11	11	10	10	9	9	8	8	7	7
31°56'–33° 9'	12	12	11	11	10	10	9	9	8	8	7
33° 9'– 34° 21'	13	12	12	11	11	10	10	9	9	8	8
34°21'–35° 31'	13	13	12	12	11	11	10	10	9	9	8
35°31'–36° 41'	14	13	13	12	12	11	11	10	10	9	9
36°41'–37° 50'	14	14	13	13	12	12	11	11	10	10	9
37°50'–38° 58'	15	14	14	13	13	12	12	11	11	10	10
38°58'–40° 5'	15	15	14	14	13	13	12	12	11	11	10
40° 5'– 41° 12'	16	15	15	14	14	13	13	12	12	11	11
41°12'–42° 19'	16	16	15	15	14	14	13	13	12	12	11
42°19'–43° 26'	17	16	16	15	15	14	14	13	13	12	12
43°26'–44° 32'	17	17	16	16	15	15	14	14	13	13	12
44°32'–45° 38'	18	17	17	16	16	15	15	14	14	13	13
45°38'–46° 45'	18	18	17	17	16	16	15	15	14	14	13
46°45'–47° 51'	19	18	18	17	17	16	16	15	15	14	14
47°51'–48° 58'	19	19	18	18	17	17	16	16	15	15	14
48°58'–50° 6'	20	19	19	18	18	17	17	16	16	15	15
50° 6'– 51° 13'	20	20	19	19	18	18	17	17	16	16	15
51°13'–52° 22'	21	20	20	19	19	18	18	17	17	16	16

Latitude North or South, in Degrees and Minutes	Height Above Sea Level, in Meters										
	0	325	650	975	1300	1625	1950	2275	2600	2925	3250
	325	650	975	1300	1625	1950	2275	2600	2925	3250	3575
	Height Above Sea Level, in Feet										
	0	1060	2130	3200	4260	5330	6400	7460	8530	9600	10660
	1060	2130	3200	4260	5330	6400	7460	8530	9600	10660	11730
52°22’–53° 31’	21	21	20	20	19	19	18	18	17	17	16
53°31’–54° 41’	22	21	21	20	20	19	19	18	18	17	17
54°41’–55° 52’	22	22	21	21	20	20	19	19	18	18	17
55°52’–57° 4’	23	22	22	21	21	20	20	19	19	18	18
57° 4’– 58° 17’	23	23	22	22	21	21	20	20	19	I9	18
58°17'–59° 32'	24	23	23	22	22	21	21	20	20	19	19
59°32'–60° 49'	24	24	23	23	22	22	21	21	20	20	19
60°49'–62° 9'	25	24	24	23	23	22	22	21	21	20	20
62° 9'– 63° 30'	25	25	24	24	23	23	22	22	21	21	20
63°30'–64° 55'	26	25	25	24	24	23	23	22	22	21	21
64°55'–66° 24'	26	26	25	25	24	24	23	23	22	22	21
66°24'–67° 57'	27	26	26	25	25	24	24	23	23	22	22
67°57'–69° 35'	27	27	26	26	25	25	24	24	23	23	22
69° 5'– 71° 21'	28	27	27	26	26	25	25	24	24	23	23
71°21'–73° 16'	28	28	27	27	26	26	25	25	24	24	23
73°16'–75° 24'	29	28	28	27	27	26	26	25	25	24	24
75°24'–77° 52'	29	29	28	28	27	27	26	26	25	25	24
77°52'–80° 56'	30	29	29	28	28	27	27	26	26	25	25
80°56'–85° 45'	30	30	29	29	28	28	27	27	26	26	25
85°45'–90° 00'	31	30	30	29	29	28	28	27	27	26	26

MP82 Scale Metrological Seal Installation Instructions

Note: These instructions only apply to Weights and Measures resources.

ⓘ Before placing your scale into retail operation:
1. Contact Weights and Measures office for additional requirements and certifications.
2. If you have other questions, please go to: www.pitneybowes.com/support

If a wire seal is required for W & M requirements, the scale can be sealed after calibration and setup by installing a wire seal on the Main PCB access cover per the instructions below.

1. Install the wire through the hole in the first hex screw and through the hole in the second secure hex screw of the circuit board access cover.

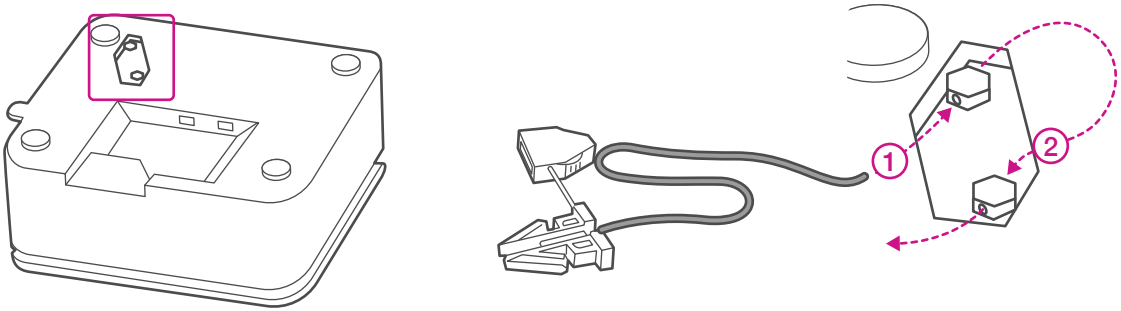

2. Route the end of the wire seal through the hole in the middle of the plastic cap and pull the excess cable through the seal to make a loop short as possible.

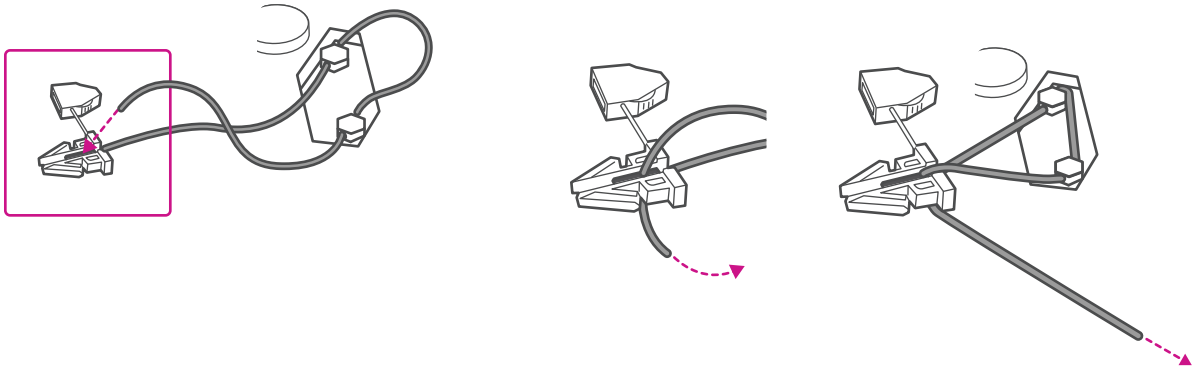

Bend the cap over the top and route it down through the base of the seal.

3. Install locking mechanism over wires and trim excess wire. When secured, approval labels can be applied.

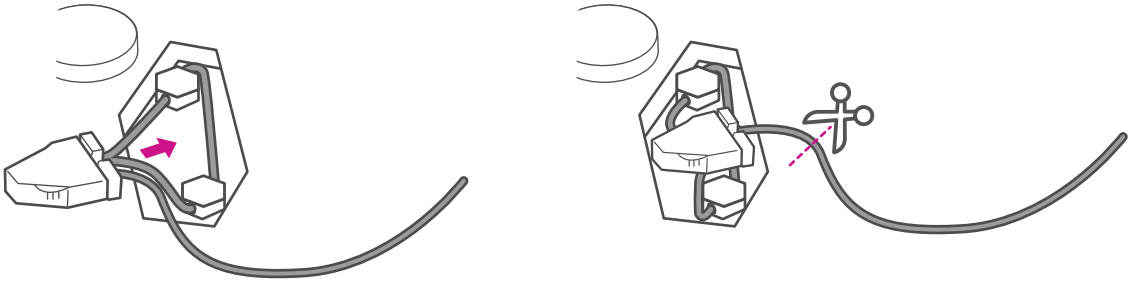

3001 Summer Street
Stamford CT 06926-0700
www.pitneybowes.com

AW32479 Rev.